FAQ - Using a Skyeye with your system

Installer recommended

You can use a Skyeye with Digital Plumbing but there are a few things you need to know beforehand (the manufacturers of the Skyeye always recommended for best results you get a qualified installer to install the Skyeye). The Skyeye (or TV Link) allows you to control the satellite receiver in the Main Living Space remotely from a Connected Room.

Plugging in equipment in a Connected Room

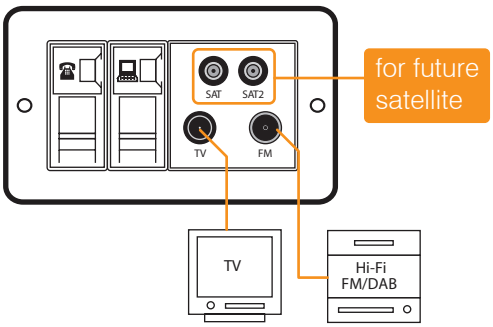

Using the Room Media Socket in each Connected Room you are able to plug in your TV and Radio using the TV and FM connections. The Room Media Socket also features SAT and SAT 2 connections - these are provisional connections which allow you or your installer to connect a local satellite receiver at a later date (with some minimal connection work) should you wish without the need to have to run new wires throughout the home.

Connecting a Skyeye (or TV Link) in a Connected Room

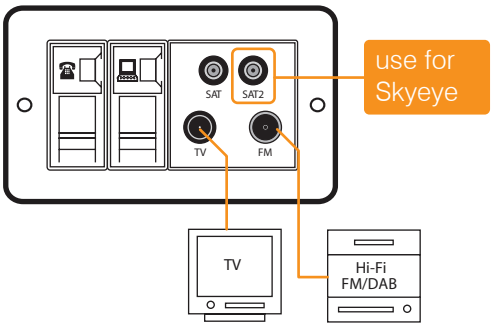

If you wish to use a Skyeye or TV Link in a Connected Room you need to use a specific connector on the Room Media Socket - SAT 2. This may require some connection work at TV Amplifier located in the Distribution Panel .

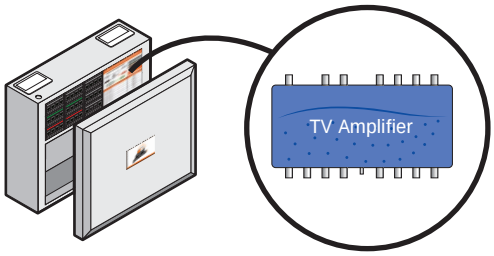

The white coaxial cable (which is connected to SAT 2 in the Room Media Socket) will need to be connected to a spare port on the TV Amplifier. This will allow the signals from the Skyeye to travel through the Room Media Socket where to the TV Amplifier where they are directed to the satellite receiver located in the Main Living Space.

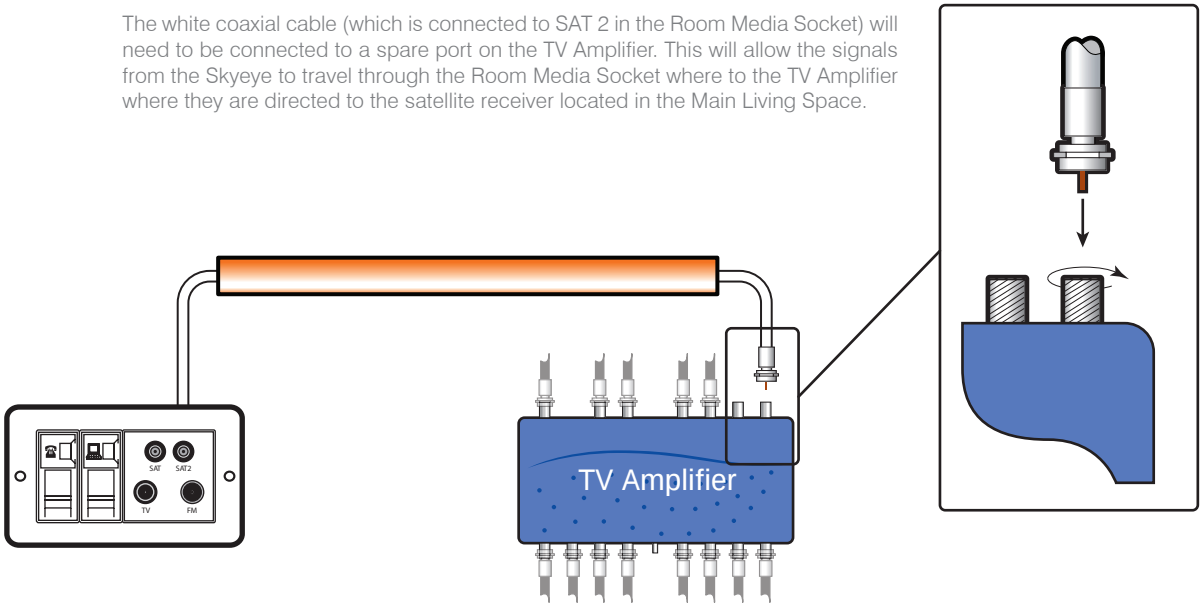

On a standard installation ports 7 & 8 and are left spare on the TV Amplifer for use with a Sky Eye (these are located on the top right of the TV Amplifier). The white coaxial cables should be terminated with F-type screw on connectors.

Connect the Skyeye to SAT2 on the Room Media Socket. You will still connect you TV to the TV connection on the Room Media Socket and not to the Skyeye itself.

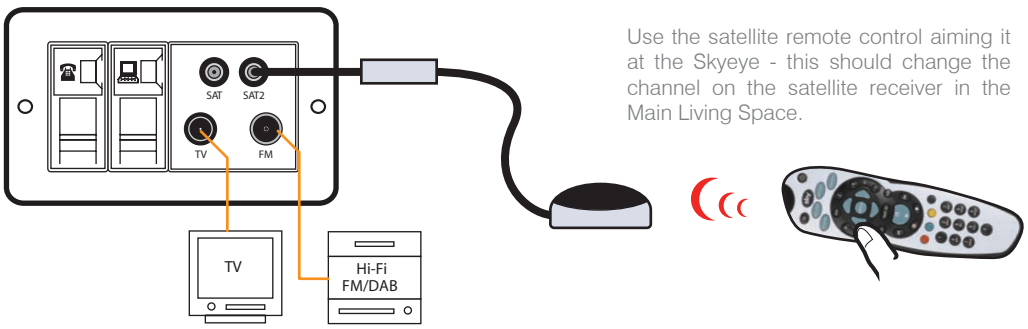

Use the satellite remote control aiming it at the Skyeye - this should change the channel on the satellite receiver in the Main Living Space.

If no spare ports are available on the TV Amp

There is an alternative way to connect a Skyeye or TV Link to your system if no spare ports are available on the TV Amp. It involves swapping over the cables behind the socket (using this method you will no longer be able to use the TV & FM connections on your Room Media Socket and will connect your TV to the system using SAT 2 and the Skyeye)

Currently the black coxial cable in the Room Media Socket is connected to the TV / FM connectors - the black cable is also connected to the TV Amplifier in the Distribution Panel.

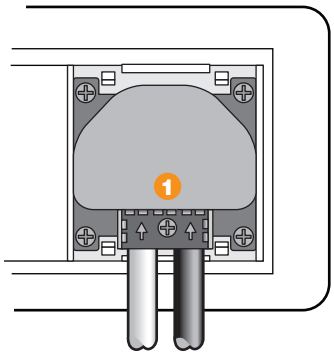

The rear of the Room Media Socket should be configured something like this, with black and white coaxial cables going into the TV Module.

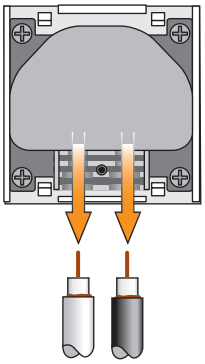

Remove the coxial cables from the TV Module.

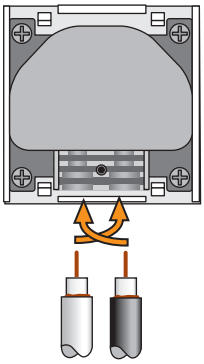

Swap the coxial cables around.....

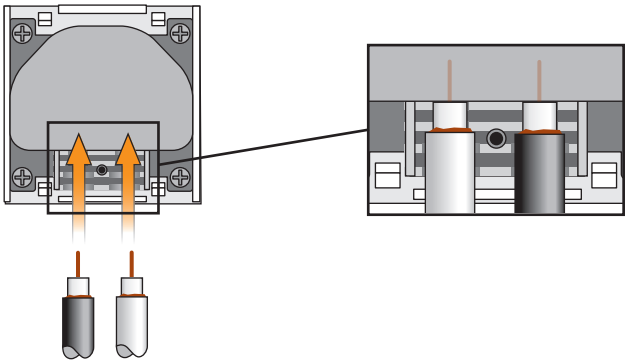

...and re-insert the coaxial cables to the TV Module.

Connect the Skyeye to SAT2 on the Room Media Socket. You will need to connect your TV to the Skyeye unit.

NOTE: you will no longer be able to use the TV / FM connections on your Room Media Socket.

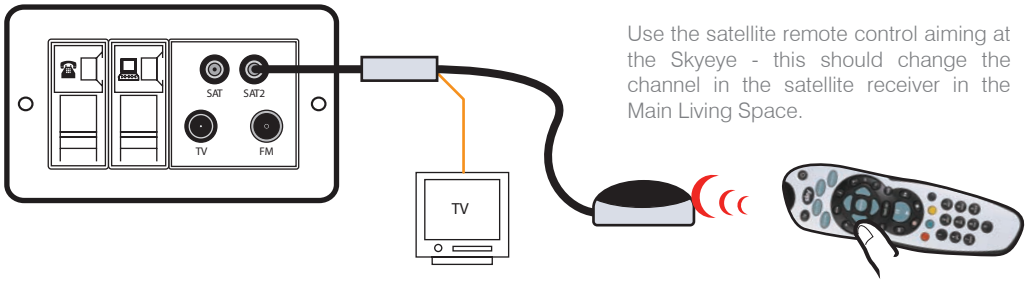

Use the satellite remote control aiming at the Skyeye - this should change the channel in the satellite receiver in the Main Living Space.